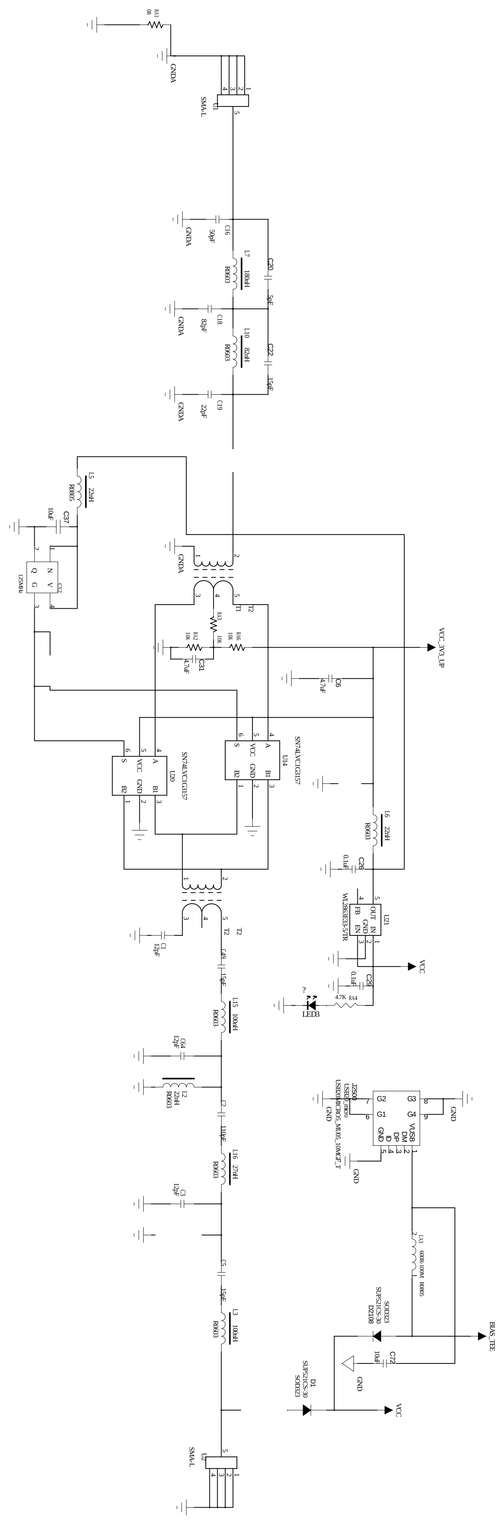
SMA-F
L1 100nH
R003
C3 47pF
L2 150nH
R003
C4 100pF
L5 750nH
R003
C6 47pF
L7 100nH
R003
C7 10pF
L8 750nH
R003
C8 47pF
T2
L9 15µF
L10 15µF
T1 47pF
D1
SDR0503
SMP5V0C0603
C12
1nF
GND
VCC
D2
SMP5V0C0603
R2200
L11 6000-8000 8000G
BIAS_TEE
U3303-SC-M10G-20PACF_T
J2202
VCC
C2 2.2µF
R003
L6 750nH
R003
C5 10pF
L3 150nH
R003
C1 47pF
T1
U3
SN74LVC1G157
U4
SN74LVC1G157
U20
SN74LVC1G157
C21
1.5pF
R16
100
R15
100
R14
100
R13
100
R12
100
R11
100
C9
4.7pF
VCC_3V3_LP
T3
L12 250nH
R003
C10
0.1µF
U21
WA3R3C033-301K
VCC
C20
0.1µF
R4
470
LED1
U5
SSA-L
GND
R10
30
C16
56pF
GND
L7 100nH
R003
C15
56pF
GND
L6 750nH
R003
C14
62pF
GND
L5 750nH
R003
C13
22pF
GND